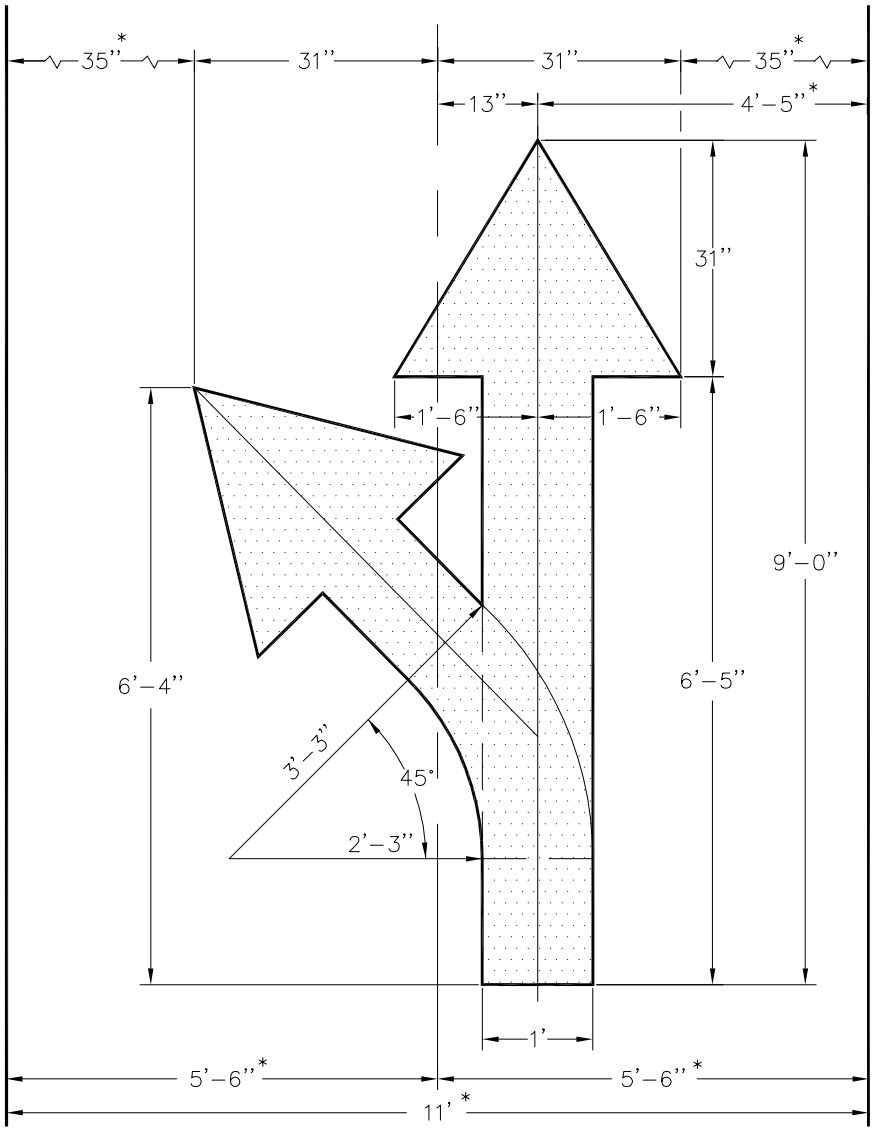

* BASED ON TYPICAL 11-FOOT LANE WIDTH

THRU & LEFT TURN ONLY
ARROW DETAIL
ADOPTED
CITY OF RENTON

STANDARD PLANS
LST DATE: 04/04

DATE	REVISION	BY	APPR'D

DWG. NAME: H010

SP PAGE: H010